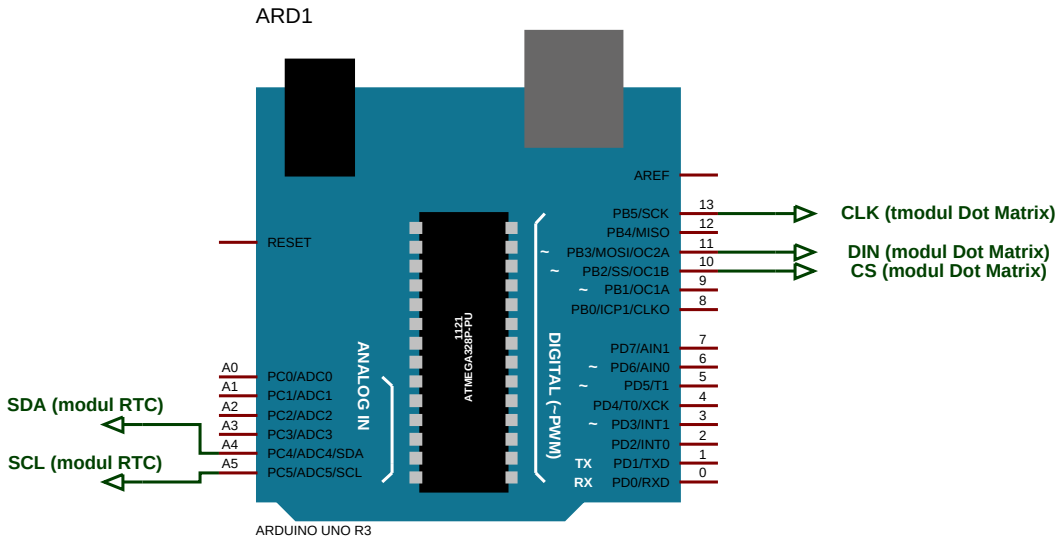
ARD1
AREF
RESET
PB5/SCK
PB4/MISO
PB3/MOSI/OC2A
PB2/SS/OC1B
PB1/OC1A
PB0/ICP1/CLKO
PD7/AIN1
PD6/AIN0
PD5/T1
PD4/T0/XCK
PD3/INT1
PD2/INT0
PD1/TXD
PD0/RXD
TX
RX
13
12
11
10
9
8
7
6
5
4
3
2
1
0
CLK (tmodul Dot Matrix)
DIN (modul Dot Matrix)
CS (modul Dot Matrix)
ANALOG IN
DIGITAL (~PWM)
ATMEGA328P-PU
1121
A0
A1
A2
A3
A4
A5
PC0/ADC0
PC1/ADC1
PC2/ADC2
PC3/ADC3
PC4/ADC4/SDA
PC5/ADC5/SCL
SDA (modul RTC)
SCL (modul RTC)
ARDUINO UNO R3